Octab Enhanced Range – 3399

Specifications

AD SERIES

OEM available

Octab Enhanced Range - 3399

Highly reliable professional tablets for deploying Android. Designed for 24/7 Commercial use. Compact & rugged. Touchscreen as standard. Also available with no touch.

Key Features

Android

Capacitive Touchscreen

Wifi Enabled

24 Hour Commercial Use

Fully compliant with Zoho Assist unattended

Enrol & provision via QR code enabled

Call Us: +44 (0)870 005 5520

Email: eva2@adseries.com

Octab Enhanced Range – 3399

Specifications

AD SERIES

OEM available

Overview

Low cost, highly reliable professional tablets for deploying Android. Designed for 24/7 Commercial use. Compact & rugged. Touchscreen as standard. Also available with no touch.

Markets

Our Android tablets are designed to address retail and commercial sector applications unmatched by consumer tablets – robust, highly reliable and in an unbeatable range of sizes. They cater for both simple and more complex apps

Benefits

- Compact & rugged. • Rockchip 3399
- Highly reliable, designed for 24/7 commercial use
- Auto-on
- Smaller screen sizes available
- Available for customisation and economical for larger production

Key Features

Android

24 Hour Commercial Use

Capacitive Touchscreen

Enrol & provision via QR code enabled

Fully compliant with Zoho Assist unattended

Wifi Enabled

Call Us: +44 (0)870 005 5520

Email: eva2@adseries.com

Octab Enhanced Range – 3399

Specifications

AD SERIES

Product Details					
	Product Code	OCTAB101P-T-3	OCTAB116P-T-3	OCTAB141P-T-3	OCTAB156P-T-3
Screen size					
	Screen Size	10.1"	11.6"	14.1"	15.6"
Panel					
	Resolution	1280x800	1920x1080	1920x1080	1920x1080
	Aspect Ratio	16:9	16:9	16:9	16:9
	Viewing Angle	89x89x89x89	89x89x89x89	85x85x85x85	85x85x85x85
	Active Area	216.96x135.6	256.32x144.18	309.21x173.98	344.16x193.59
	Brightness	250-600	250-600	250-600	250-600
	Contrast	900:1	800:1	800:1	800:1
Touch					
	Touch Technology	Capactive Touch (G+G optional)	Capactive Touch (G+G optional)	Capactive Touch (G+G optional)	Capactive Touch (G+G optional)
	Touch Points	10	10	10	10
Hardware & OS					
	CPU	Core A53, 2.0GHz, Rockchip 3399	Core A53, 2.0GHz, Rockchip 3399	Core A53, 2.0GHz, Rockchip 3399	Core A53, 2.0GHz, Rockchip 3399
	RAM	4GB	4GB	4GB	4GB
	Storage	16GB / 32GB	16GB / 32GB	16GB / 32GB	16GB / 32GB
	OS	Android version 8.1	Android version 8.1	Android version 8.1	Android version 8.1
Power					
	Power Consumption	24	24	36	36
	Power Requirement	12V 2A	12V 2A	12V 3A	12V 3A (2A)
	Power Jack	USB Host 3.0	USB Host 3.0	USB Host 3.0	USB Host 3.0
Connections					
	USB Device	Yes	Yes	Yes	Yes
	USB Host	USB Host 3.0	USB Host 3.0	USB Host 3.0	USB Host 3.0
	HDMI	HDMI Output	HDMI Output	HDMI Output	HDMI Output
	Wifi	WiFi 2.4 GHz 802.11b/g/n (optional 5GHz 802.11a)	WiFi 2.4 GHz 802.11b/g/n (optional 5GHz 802.11a)	WiFi 2.4 GHz 802.11b/g/n (optional 5GHz 802.11a)	WiFi 2.4 GHz 802.11b/g/n (optional 5GHz 802.11a)
	Ethernet	No	No	No	No
	Bluetooth	Bluetooth 4.0	Bluetooth 4.0	Bluetooth 4.0	Bluetooth 4.0
	3G dongle	3G USB dongle ext.	3G USB dongle ext.	3G USB dongle ext.	3G USB dongle ext.
	Card Slot	SD,Support up to 32GB	SD,Support up to 32GB	SD,Support up to 32GB	SD,Support up to 32GB
	Earphone	3.5mm earphone	3.5mm earphone	3.5mm earphone	3.5mm earphone
Media					
	Video Format	WMV, AVI, FLV, RM, RMBV, MPEG, TS, MP4, etc. RK3288: support up to 1080p	WMV, AVI, FLV, RM, RMBV, MPEG, TS, MP4, etc. RK3288: support up to 1080p	WMV, AVI, FLV, RM, RMBV, MPEG, TS, MP4, etc. RK3288: support up to 1080p	WMV, AVI, FLV, RM, RMBV, MPEG, TS, MP4, etc. RK3288: support up to 1080p
	Image Format	BMP, JPEG, PNG, GIF	BMP, JPEG, PNG, GIF	BMP, JPEG, PNG, GIF	BMP, JPEG, PNG, GIF
	Audio Format	MP3/WMA/AAC	MP3/WMA/AAC	MP3/WMA/AAC	MP3/WMA/AAC
Optional					
	Camera	2.0M/P Front	2.0M/P Front	2.0M/P Front	2.0M/P Front
Accessories					
	Included In Box	Power Supply	Power Supply	Power Supply	Power Supply
General Information					
	Speakers	2x 2W	2x 2W	2x 2W	2x 3W
	Colour	Black	Black	Black	Black
	Language	Multi-language	Multi-language	Multi-language	Multi-language
	Working Temperature	0-50 degrees	0-50 degrees	0-50 degrees	0-50 degrees
	Unit Size (LxWxHmm)	260.54x178.54x27.50	284.65x182.25x27.48	355x228x?	403.76x252.76x33.50
	Package Size (LxWxHmm)	286x256x74	350x25875	373x320x78	480x295x88
	Vesa Mounting (mm)	75x75	75x75	75x75	75x75
	Unit Weight (kg)	0.65	0.44	0.95	1.36
	Package Weight (kg)	0.82	0.76	1.4	2.25

*Specifications are typical and subject to change.

Octab Enhanced Range – 3399

Specifications

AD SERIES

Product Details						
	Product Code	OCTAB173P-T-3	OCTAB215P-T-3	OCTAB238P-T-3	OCTAB270P-T-3	OCTAB320P-T-3
Screen size						
	Screen Size	17.3"	21.5"	23.8"	27"	32"
Panel						
	Resolution	1920x1080	1920x1080	1920x1080	1920x1080	1920x1080
	Aspect Ratio	16:9	16:9	16:9	16:9	16:9
	Viewing Angle	85x85x85x85	89x89x89x89	89x89x89x89	89x89x89x89	89x89x89x89
	Active Area	381.89x214.81	474.64x268.11	527.04x296.46	597.6x336.15	698.4x392.85
	Brightness	250-600	250-600	250-600	250-600	250-600
	Contrast	800:1	3000:1	1000:1	3000:1	1000:1
Touch						
	Touch Technology	Capactive Touch (G+G optional)	Capactive Touch (G+G optional)	Capactive Touch (G+G optional)	Capactive Touch (G+G optional)	Capactive Touch (G+G optional)
	Touch Points	10	10	10	10	10
Hardware & OS						
	CPU	Core A53, 2.0GHz, Rockchip 3399	Core A53, 2.0GHz, Rockchip 3399	Core A53, 2.0GHz, Rockchip 3399	Core A53, 2.0GHz, Rockchip 3399	Core A53, 2.0GHz, Rockchip 3399
	RAM	4GB	4GB	4GB	4GB	4GB
	Storage	16GB / 32GB	16GB / 32GB	16GB / 32GB	16GB / 32GB	16GB / 32GB
	OS	Android version 8.1	Android version 8.1	Android version 8.1	Android version 8.1	Android version 8.1
Power						
	Power Consumption	36	36	48	48	60
	Power Requirement	12V 3A	12V 3A	12V 4A	12V 4A	12V 5A
	Power Jack	USB Host 3.0	USB Host 3.0	USB Host 3.0	USB Host 3.0	USB Host 3.0
Connections						
	USB Device	Yes	Yes	Yes	Yes	Yes
	USB Host	USB Host 3.0	USB Host 3.0	USB Host 3.0	USB Host 3.0	USB Host 3.0
	HDMI	HDMI Output	HDMI Output	HDMI Output	HDMI Output	HDMI Output
	Wifi	WiFi 2.4 GHz 802.11b/g/n (optional 5GHz 802.11a)	WiFi 2.4 GHz 802.11b/g/n (optional 5GHz 802.11a)	WiFi 2.4 GHz 802.11b/g/n (optional 5GHz 802.11a)	WiFi 2.4 GHz 802.11b/g/n (optional 5GHz 802.11a)	WiFi 2.4 GHz 802.11b/g/n (optional 5GHz 802.11a)
	Ethernet		No	No	Yes	Yes
	Bluetooth	Bluetooth 4.0	Bluetooth 4.0	Bluetooth 4.0	Bluetooth 4.0	Bluetooth 4.0
	3G dongle	3G USB dongle ext.	3G USB dongle ext.	3G USB dongle ext.	3G USB dongle ext.	3G USB dongle ext.
	Card Slot	SD,Support up to 32GB	SD,Support up to 32GB	SD,Support up to 32GB	SD,Support up to 32GB	SD,Support up to 32GB
	Earphone	3.5mm earphone	3.5mm earphone	3.5mm earphone	3.5mm earphone	3.5mm earphone
Media						
	Video Format	WMV, AVI, FLV, RM, RMBV, MPEG, TS, MP4, etc. RK3288: support up to 1080p	WMV, AVI, FLV, RM, RMBV, MPEG, TS, MP4, etc. RK3288: support up to 1080p	WMV, AVI, FLV, RM, RMBV, MPEG, TS, MP4, etc. RK3288: support up to 1080p	WMV, AVI, FLV, RM, RMBV, MPEG, TS, MP4, etc. RK3288: support up to 1080p	WMV, AVI, FLV, RM, RMBV, MPEG, TS, MP4, etc. RK3288: support up to 1080p
	Image Format	BMP, JPEG, PNG, GIF	BMP, JPEG, PNG, GIF	BMP, JPEG, PNG, GIF	BMP, JPEG, PNG, GIF	BMP, JPEG, PNG, GIF
	Audio Format	MP3/WMA/AAC	MP3/WMA/AAC	MP3/WMA/AAC	MP3/WMA/AAC	MP3/WMA/AAC
Optional						
	Camera	2.0M/P Front	2.0M/P Front	N/A (optional)	N/A (optional)	N/A (optional)
Accessories						
	Included In Box	Power Supply	Power Supply	Power Supply	Power Supply	Power Supply
General Information						
	Speakers	2x 3W	2x 3W	2x 5W	2x 5W	2x 5W
	Colour	Black	Black	Black	Black	Black
	Language	Multi-language	Multi-language	Multi-language	Multi-language	Multi-language
	Working Temperature	0-50 degrees	0-50 degrees	0-50 degrees	0-50 degrees	0-50 degrees
	Unit Size (LxWxHmm)		539.11x332.21x39.75	595.5x363.1x43.6	660.27x400x41.03	763.77x457.21x47.02
	Package Size (LxWxHmm)		582x430x89	660x455x115	725x490x120	860x555x135
	Vesa Mounting (mm)	100x100	100x100	100x100	75x75, 100x100	75x75, 100x100
	Unit Weight (kg)		2.84	5	6.9	9.45
	Package Weight (kg)		3.75	6.5	8.85	10.52

*Specifications are typical and subject to change.

Octab Range - 3399

Specifications

Technical Drawings Index
Octab

Screen Size	Page number
10.1”	6
11.6”	7
14.1”	8
15.6”	9
17.3”	10
21.5”	11
23.8”	12
27”	13
32”	14

Octab 10.1” - OCTAB101P-T-3

Specifications

AD SERIES

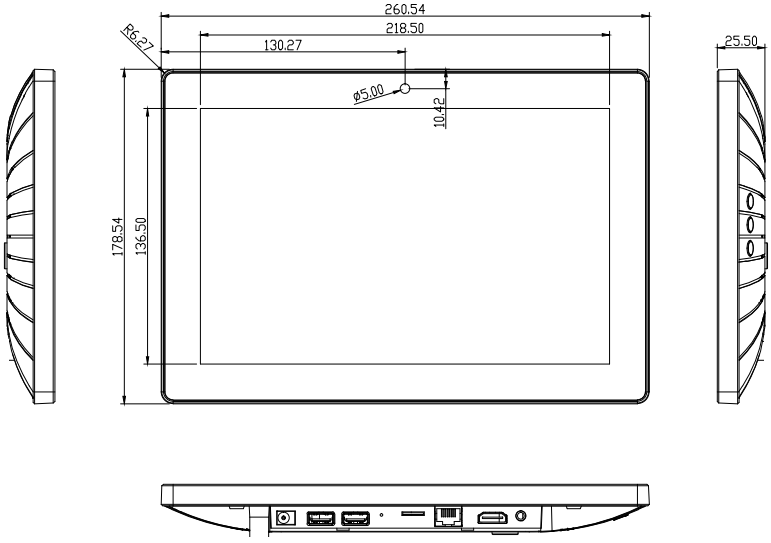

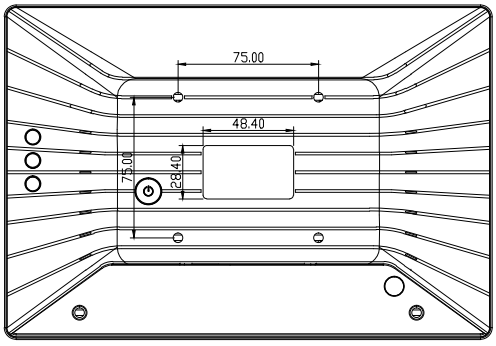

*Specifications are typical and subject to change.

Octab 11.6” - OCTAB116P-T-3

Specifications

AD SERIES

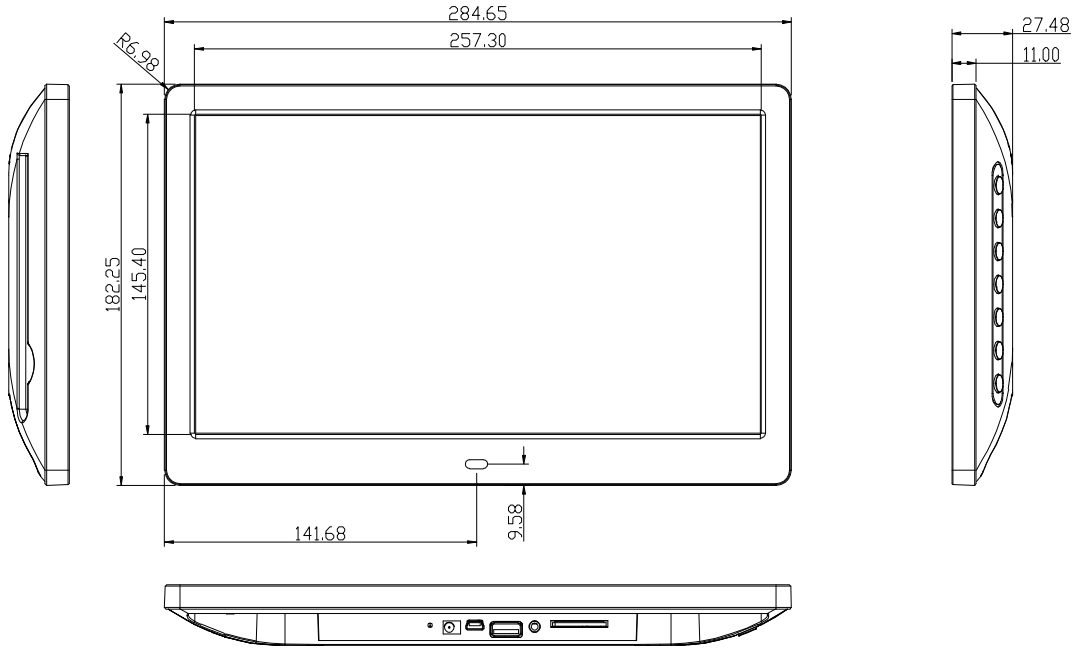

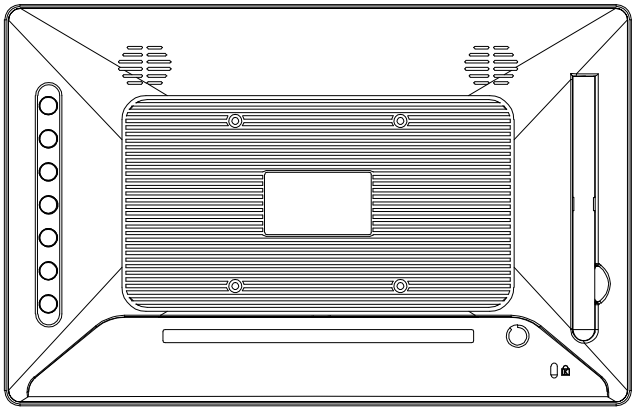

*Specifications are typical and subject to change.

Octab 14.1” - OCTAB141P-T-3

Specifications

AD SERIES

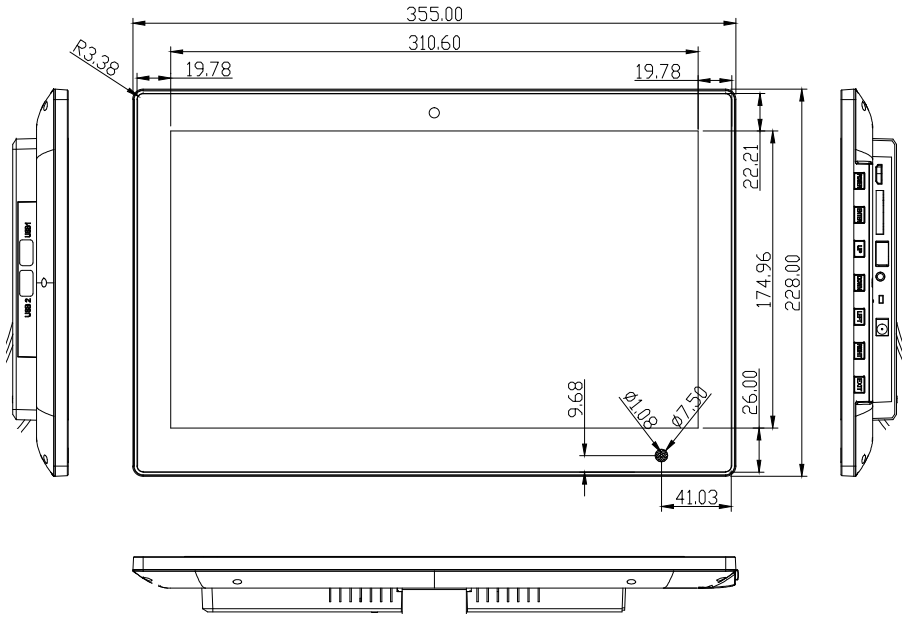

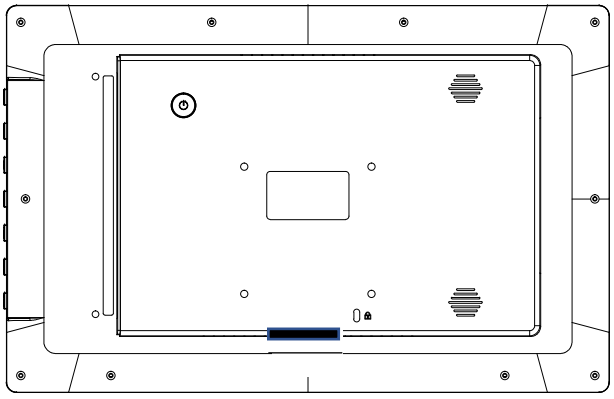

*Specifications are typical and subject to change.

Octab 15.6” - OCTAB156P-T-3

Specifications

AD SERIES

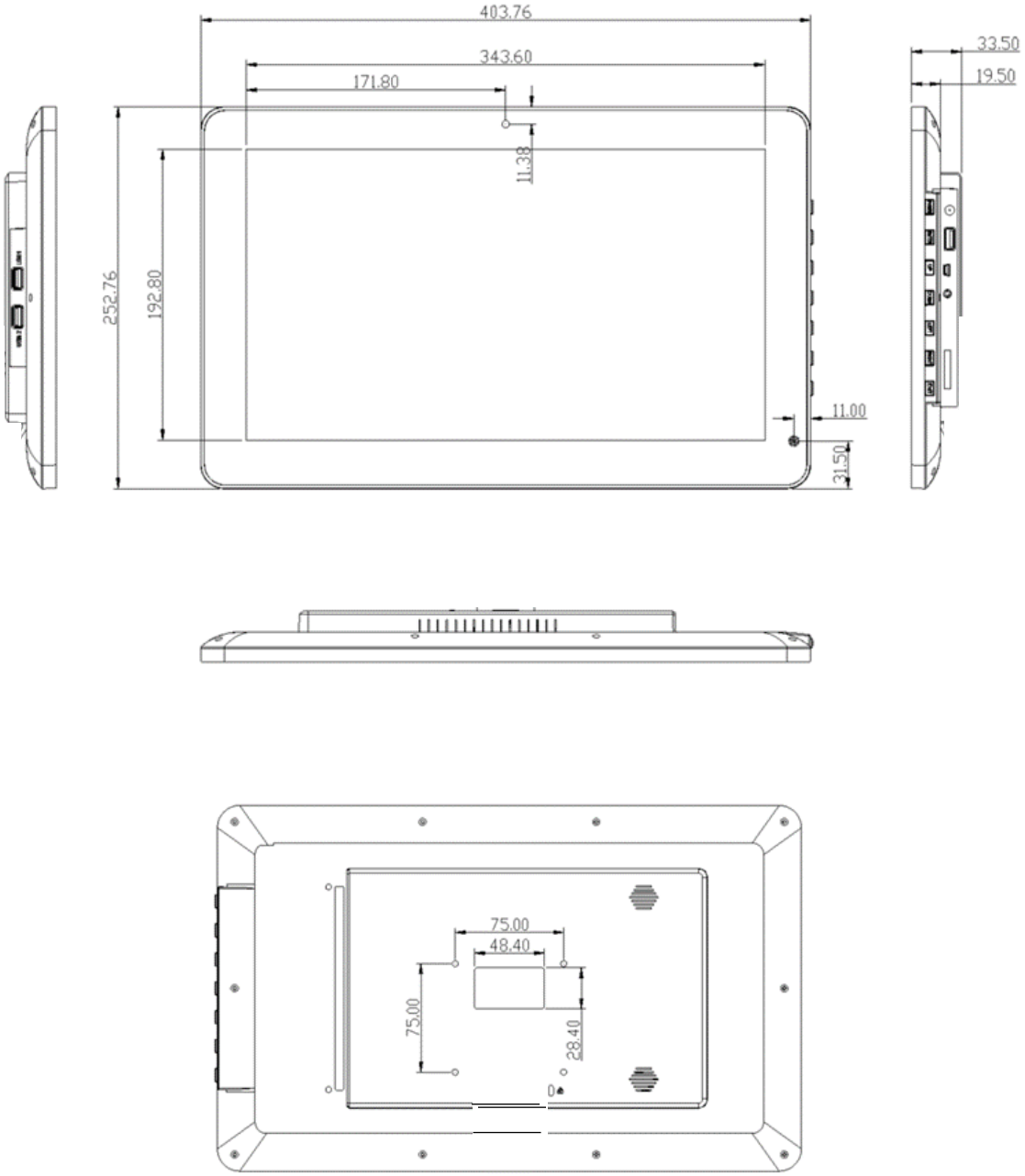

*Specifications are typical and subject to change.

Octab 17.3” - OCTAB173P-T-3

Specifications

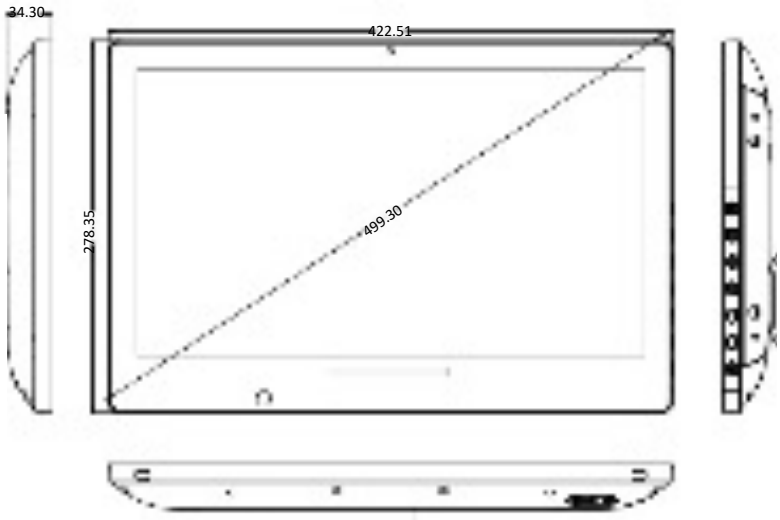

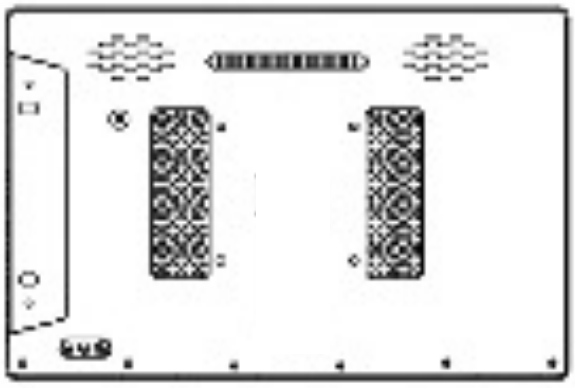

*Specifications are typical and subject to change.

Octab 21.5” - OCTAB215P-T-3

Specifications

AD SERIES

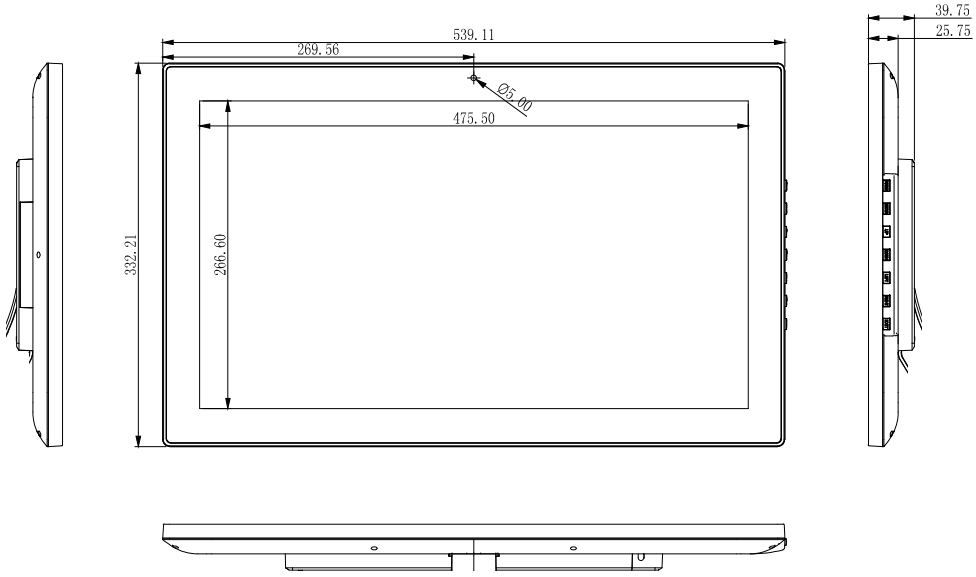

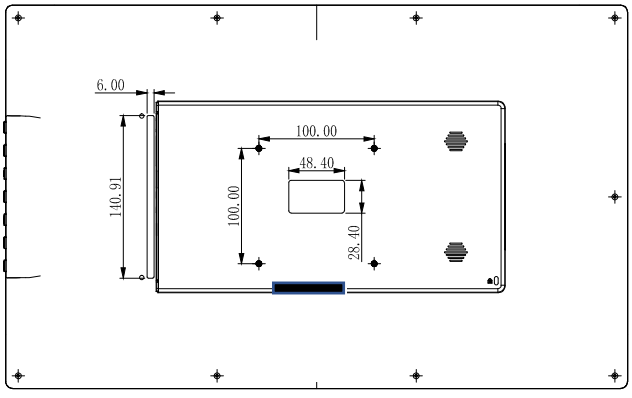

*Specifications are typical and subject to change.

Octab 23.8” - OCTAB238P-T-3

Specifications

AD SERIES

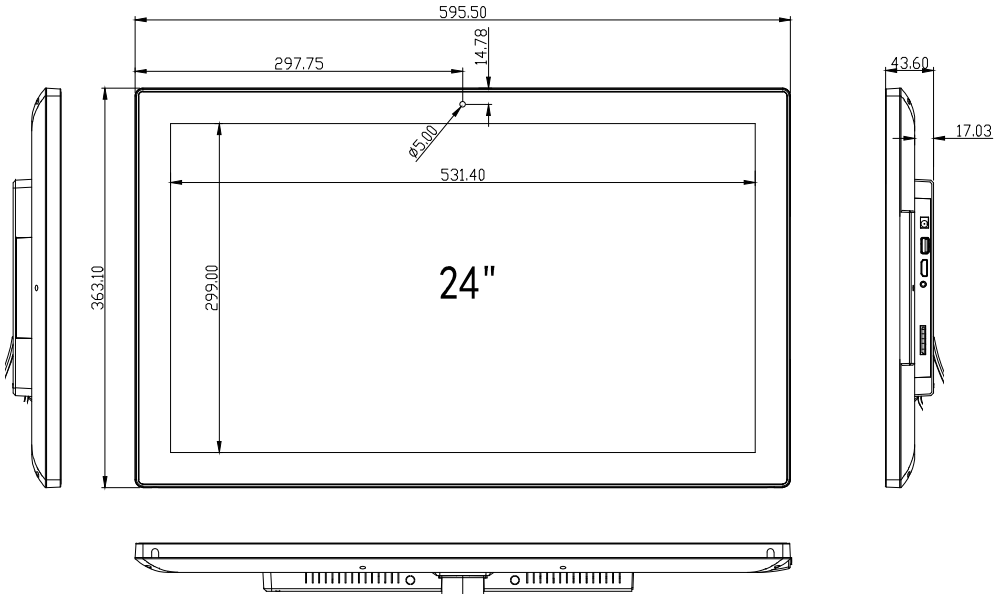

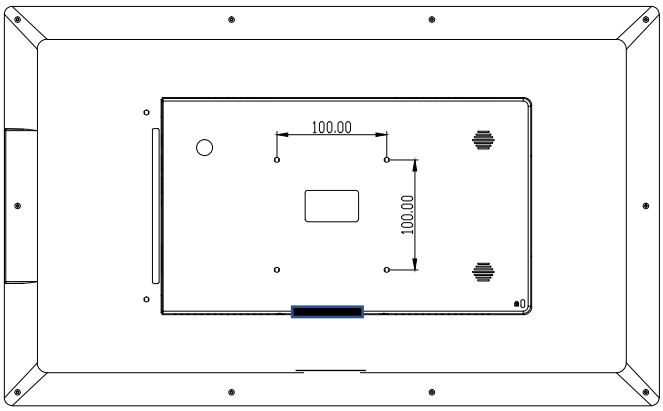

*Specifications are typical and subject to change.

Octab 27” - OCTAB270P-T-3

Specifications

AD SERIES

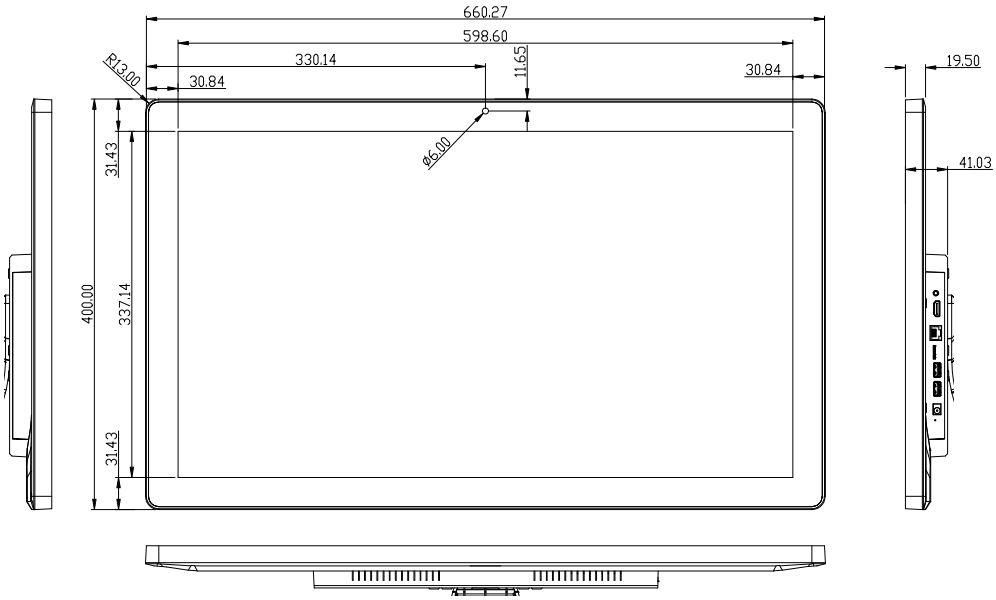

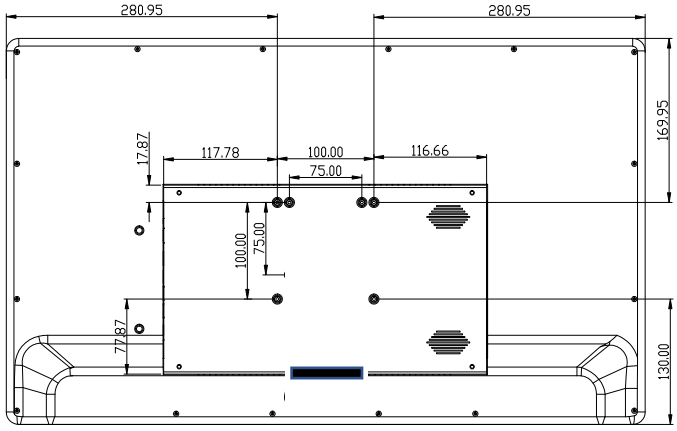

*Specifications are typical and subject to change.

Octab 32” - OCTAB320P-T-3

Specifications

AD SERIES

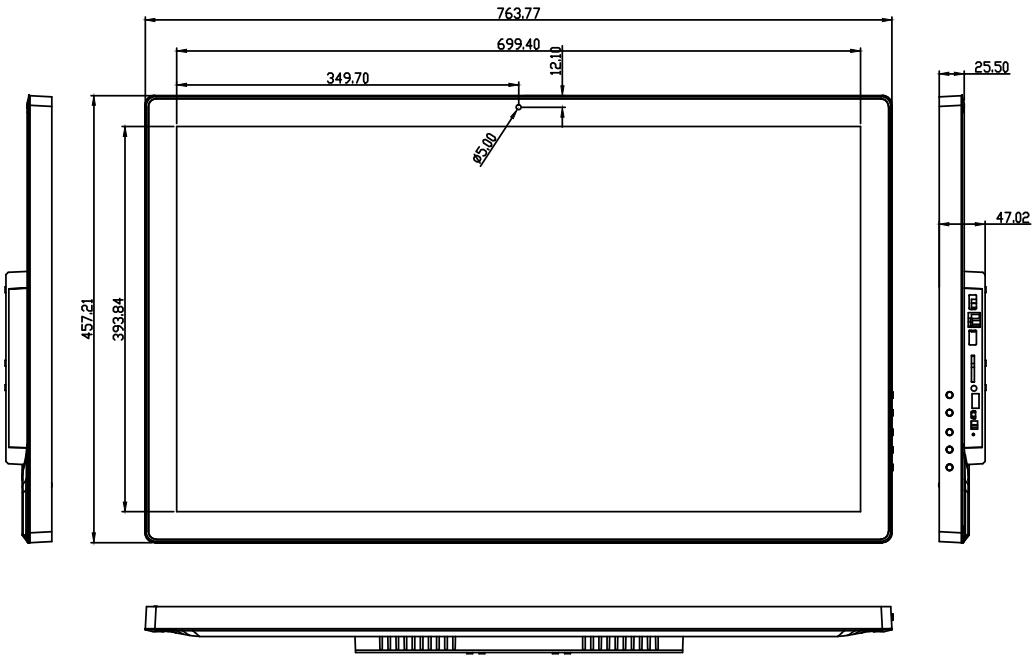

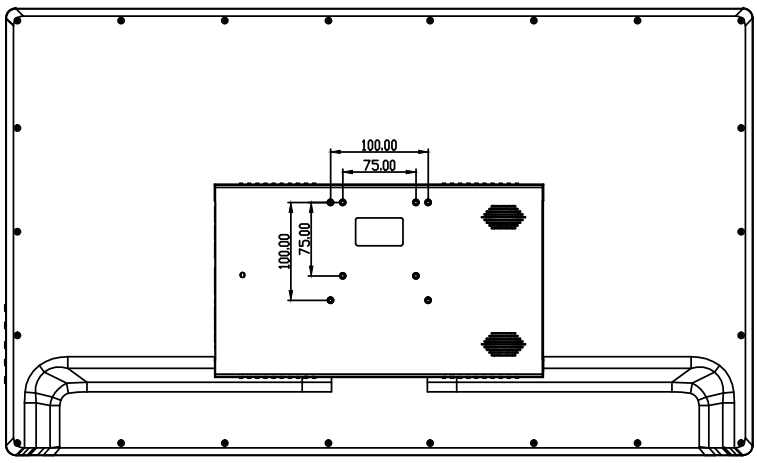

*Specifications are typical and subject to change.